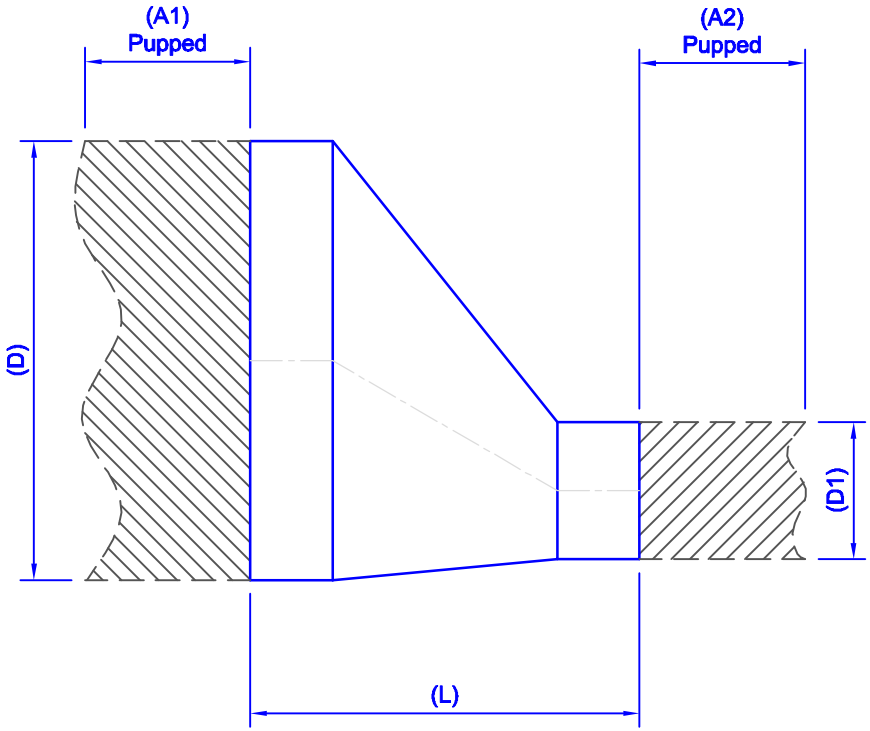

DISCLAIMER

DO NOT SCALE FROM THIS DRAWING USE FIGURED DIMENSIONS ONLY

DIMENSIONS SUBJECT TO MANUFACTURING TOLERANCES

PIPE DIA (D) from - to	(D1)	(L)	(A1)	(A2)
Ø 32	1200	X	X	X
Ø 1200	32	X	X	X

Please Note:
The pipe reduction required will govern the length of (L)

PRODUCT DRAWING

Plasflow LIMITED
Canklow Meadows Industrial Estate
West Bawtry Road
Rotherham, S60 2XL
Tel:+44(0) 01709 786 970 Fax:+44(0) 01709 378 970
EMail: info@plasflow.com Web: www.plasflow.com

Certificate No. : Q6266

Drawing Title:

Eccentric Reducer

Drawn By:	Checked By:	Approved By:		Date:
JB				15.10.07
CAD Ref. Number:	Drawing No:	Revision:	Size:	Scale:
PD050	SD050	0	A4	n/a

This drawing is the property of PLASFLOW LIMITED and must not be used, loaned, reproduced or disclosed in whole or in part to third parties without the company's written permission.

PDF created with pdfFactory trial version www.pdffactory.com